| REV. | DESCRIPTION | DATE | CHECKED | REMARK |
|---|---|---|---|---|
| A | 新規作図 | 10.05.01 | | |

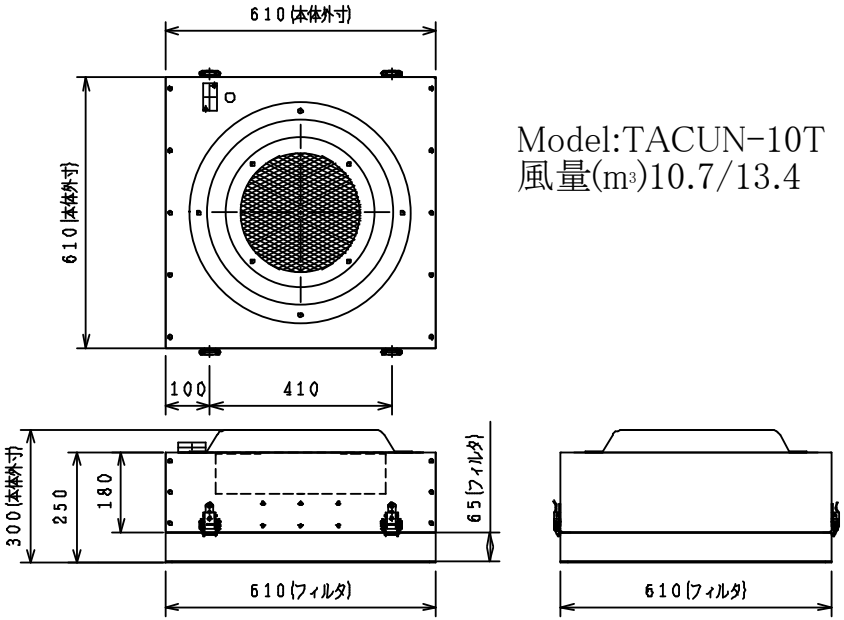


Model:TACUN-10T
風量(m³)10.7/13.4

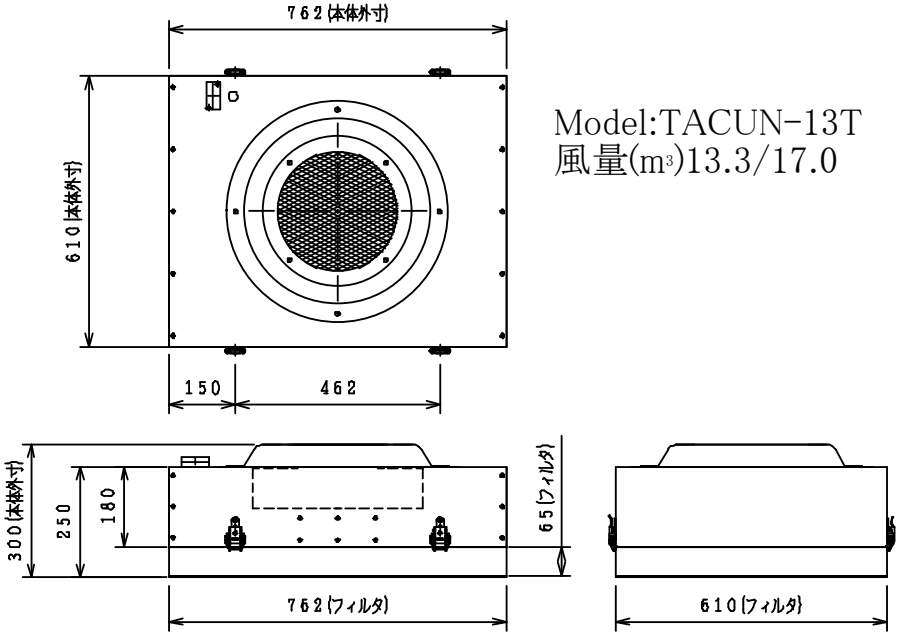


Model:TACUN-13T
風量(m³)13.3/17.0

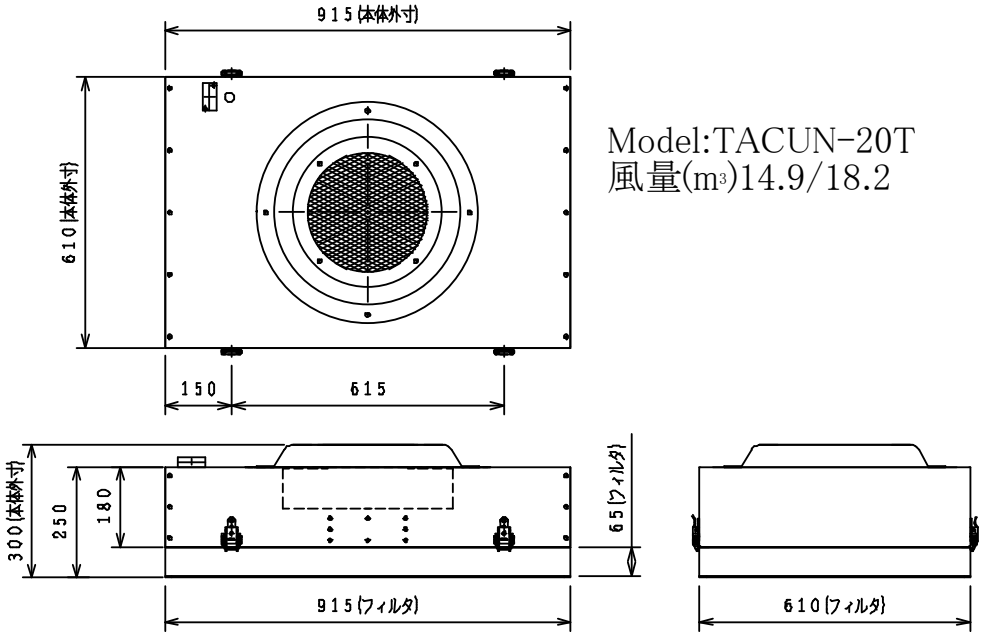


Model:TACUN-20T
風量(m³)14.9/18.2

| APPROVALS | | SIGN | DATE | TWINLINKS,Inc. | |
|---|---|---|---|---|---|
| DES. | | | 10.05.01 | | |
| DWG. | | | | TITLE | Clean Unit |
| CHK. | | | | | |
| ENGR. | | | | SCALE | UNIT |
| MATERIAL | | | | DWG NO. | ACUN-10T・13T・20T |
| COLOR | | | | | |